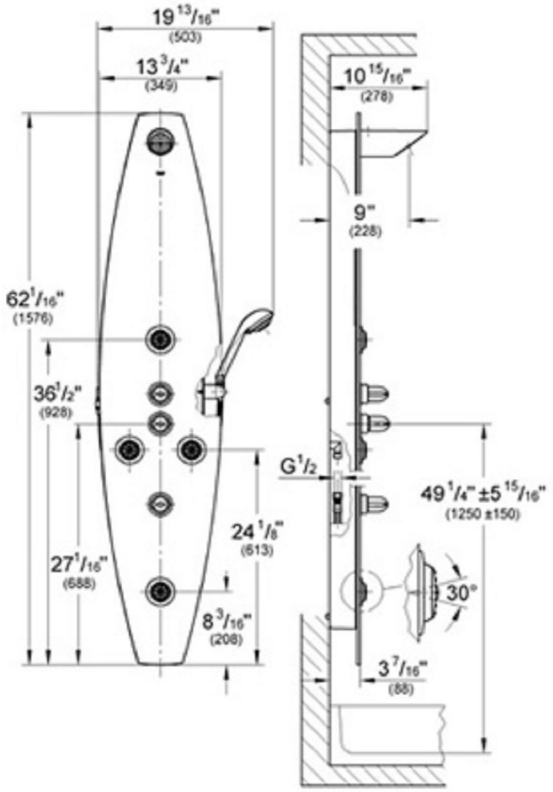
19 13/16"
(503)
13 3/4"
(349)
62 1/16"
(1576)
36 1/2"
(928)
27 1/16"
(688)
24 1/8"
(613)
8 3/16"
(208)
10 15/16"
(278)
9"
(228)
G 1/2
49 1/4" ±5 15/16"
(1250 ±150)
30°
3 7/16"
(88)