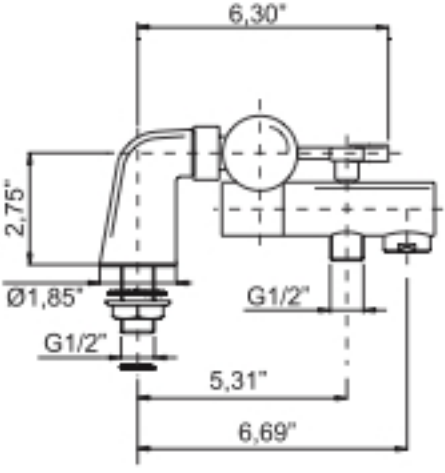
6,30"
2,75"
Ø1,85"
G1/2"
G1/2"
5,31"
6,69"

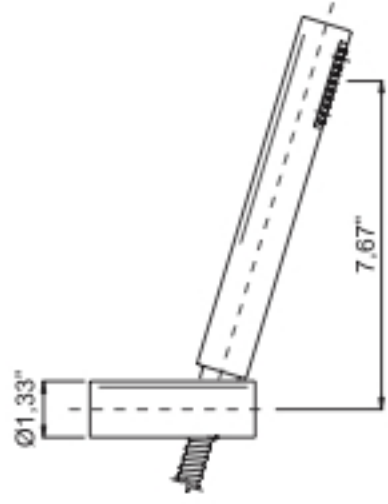
7,67"
Ø1,33"

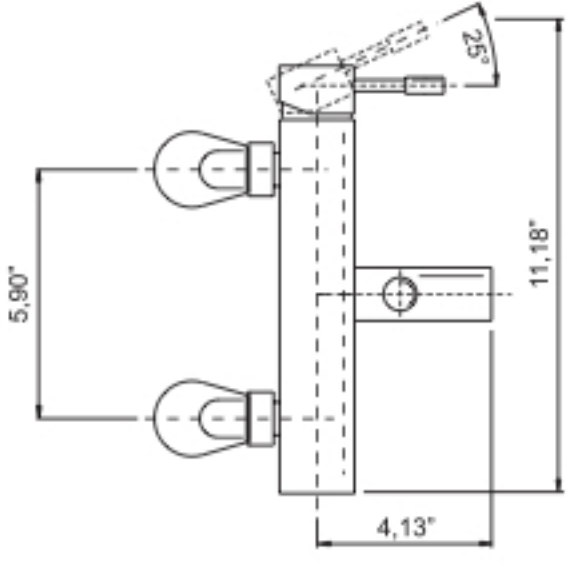
25°
11,18"
5,90"
4,13"