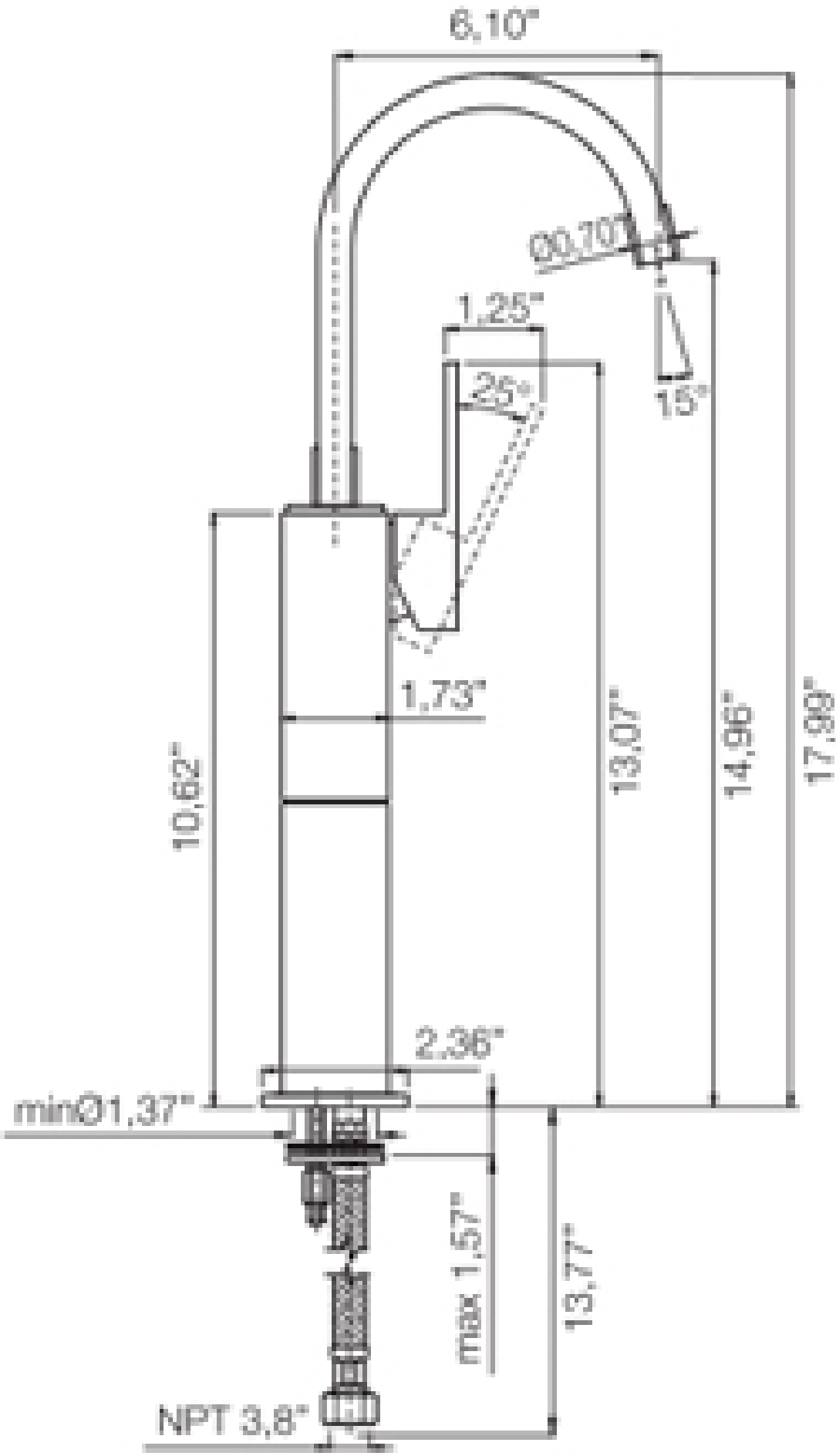
6,10"
00,70"
1,25"
25°
15°
1,73"
10,62"
13,07"
14,96"
17,99"
2,36"
minØ1,37"
max 1,57"
13,77"
NPT 3,8"