WHITEHAUS COLLECTION®

A Collection of Fine Products

www.whitehauscollection.com

A Division of W.P.S.I.

BLAIRHAUS COLLECTION

MODEL # 614.151WS

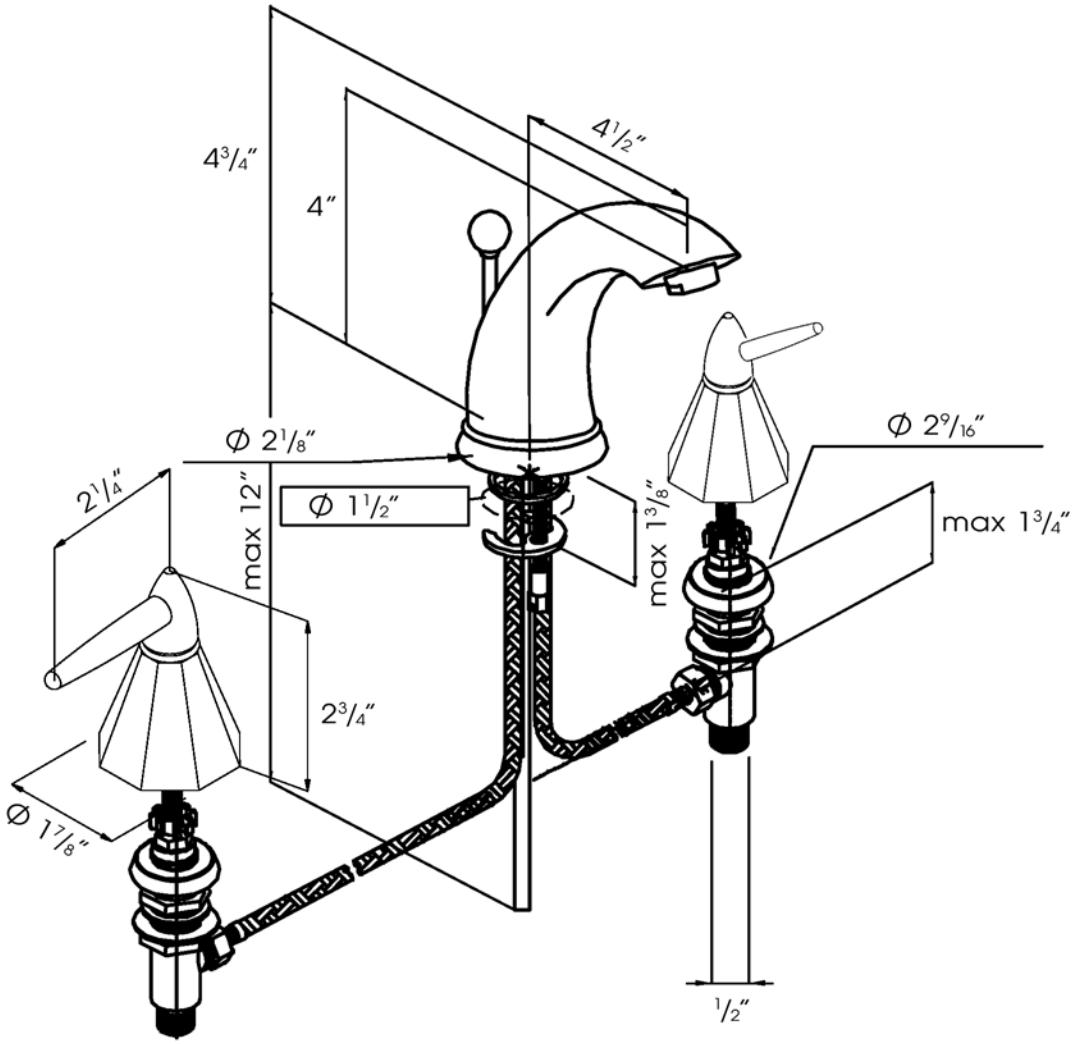

589 Orange Ave. West Haven, CT 06516 USA. Tel: 1.800.527.6690. Fax: 1.800.694.4837. E-mail: info@whitehauscollection.com